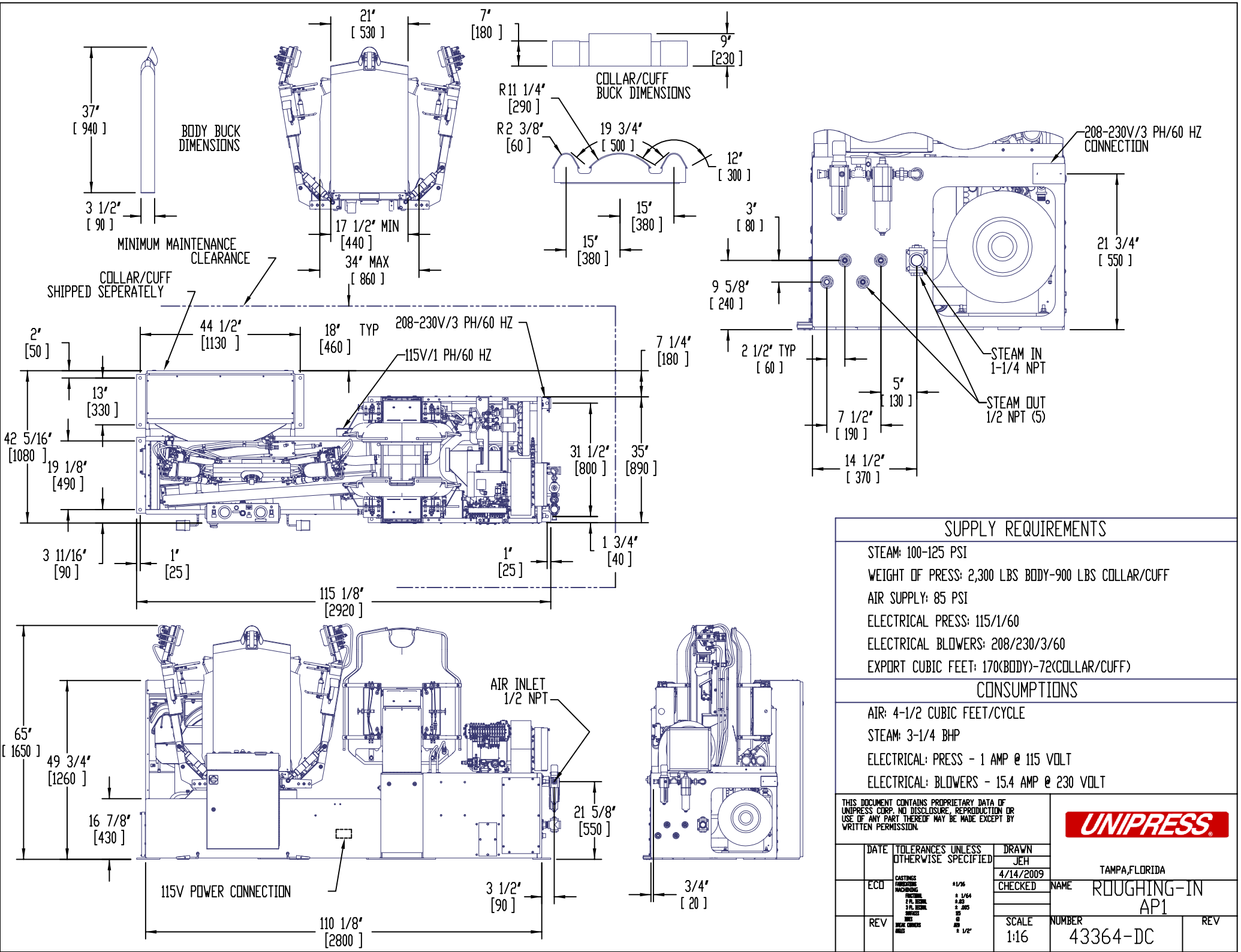

SUPPLY REQUIREMENTS

STEAM: 100-125 PSI

WEIGHT OF PRESS: 2,300 LBS BODY-900 LBS COLLAR/CUFF

AIR SUPPLY: 85 PSI

ELECTRICAL PRESS: 115/1/60

ELECTRICAL BLOWERS: 208/230/3/60

EXPORT CUBIC FEET: 170(BODY)-72(COLLAR/CUFF)

CONSUMPTIONS

AIR: 4-1/2 CUBIC FEET/CYCLE

STEAM: 3-1/4 BHP

ELECTRICAL: PRESS - 1 AMP @ 115 VOLT

ELECTRICAL: BLOWERS - 15.4 AMP @ 230 VOLT

THIS DOCUMENT CONTAINS PROPRIETARY DATA OF UNIPRESS CORP. NO DISCLOSURE, REPRODUCTION OR USE OF ANY PART THEREOF MAY BE MADE EXCEPT BY WRITTEN PERMISSION.

UNIPRESS

TAMPA,FLORIDA

DATE	TOLERANCES UNLESS OTHERWISE SPECIFIED	DRAWN JEH 4/14/2009	NAME ROUGHING-IN AP1
ECO	CASTINGS ±1/16; FABRICATIONS; MACHINING: FRACTIONAL ± 1/64; 2 PL. DECIMAL ±.03; 3 PL. DECIMAL ± .005; BREAKS .05; BEND .0; BREAK CORNERS .09; ANGLES ± 1/2°	CHECKED	
REV		SCALE 1:16	NUMBER 43364-DC REV